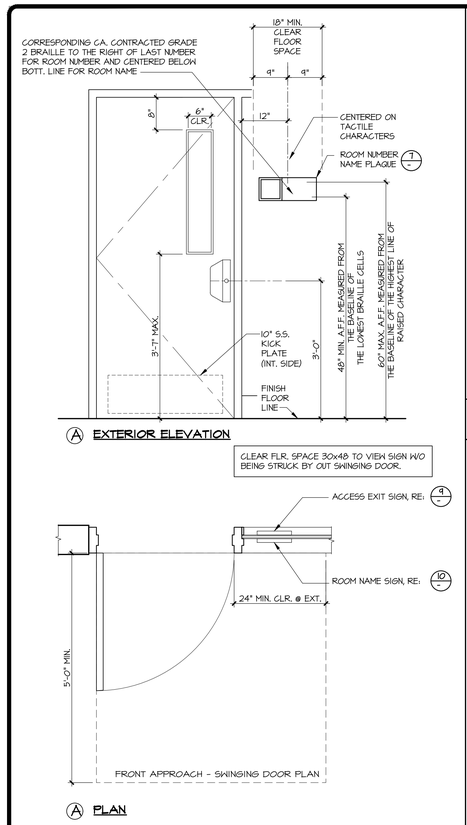


## ROOM NAME & NUMBER SIGN

SCALE: 3/4" = 1'-0" — 8

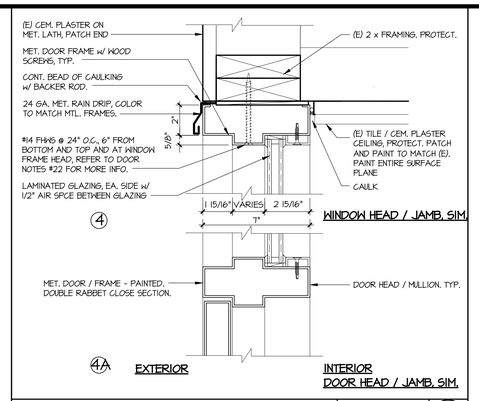


## DOOR / WINDOW HEAD JAMB SIMILAR

SCALE: 3" = 1'-0" — 4

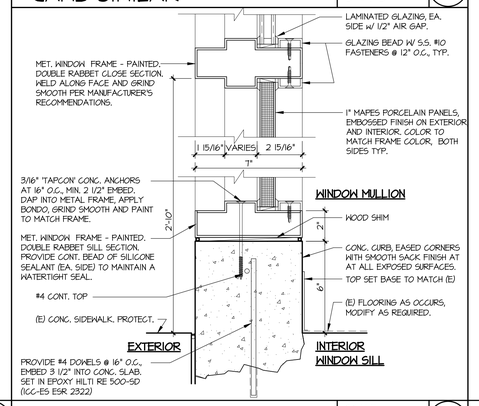


## MAPES PANEL - SILL

SCALE: 3" = 1'-0" — 5

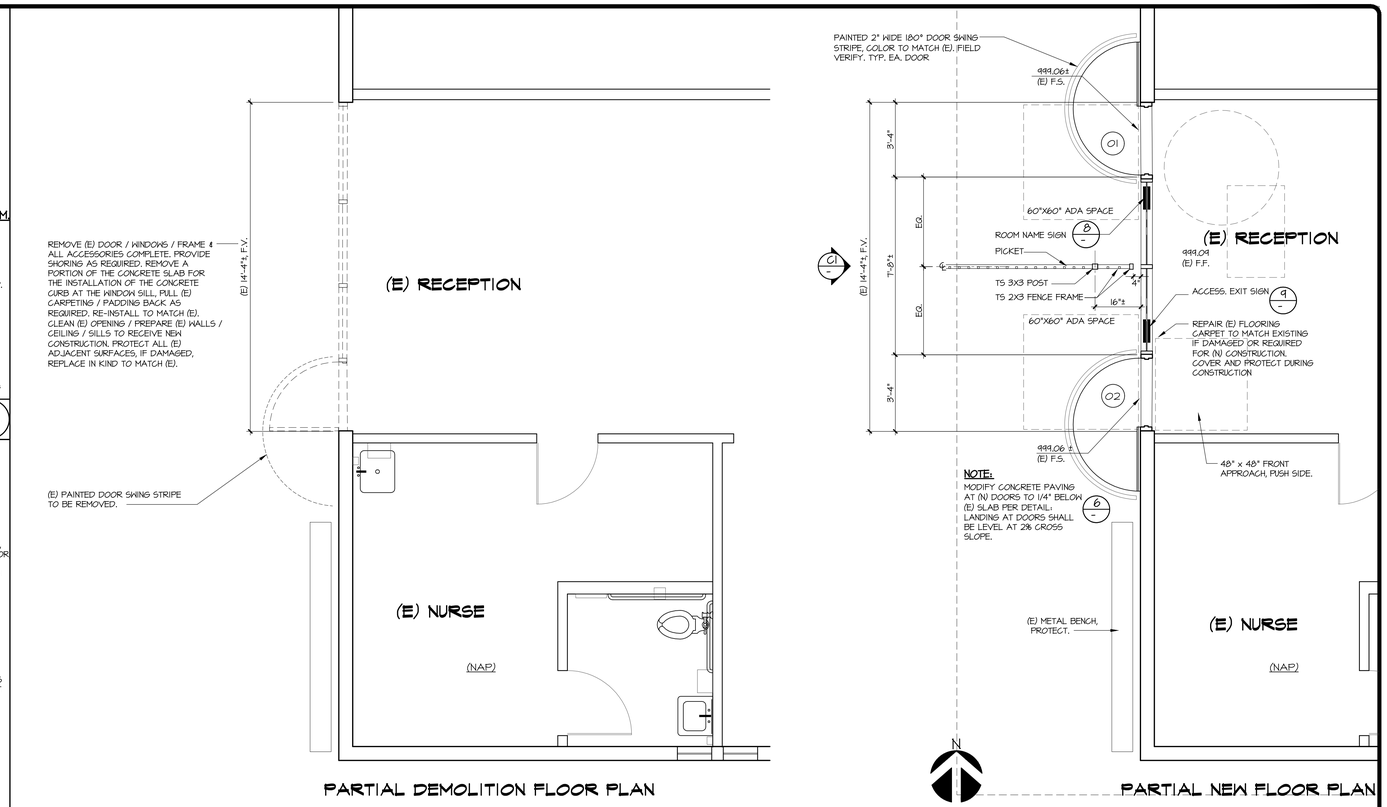


## PARTIAL FLOOR PLANS

SCALE: 3/8" = 1'-0" — 1

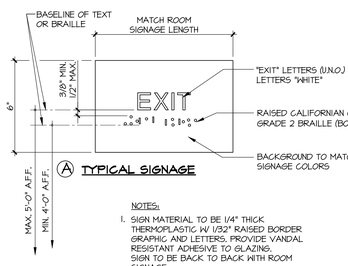


NOTES:

1. SIGN MATERIAL TO BE 1/4" THICK THERMOPLASTIC W/ 1/32" RAISED BORDER GRAPHIC AND LETTERS. PROVIDE VANDAL RESISTANT ADHESIVE TO GLAZING. SIGN TO BE BACK TO BACK WITH ROOM SIGNAGE.
2. FOR LOCATION, REFER TO FLOOR PLANS AND DOOR SCHEDULE.
3. FOR TYPICAL SIGNAGE MOUNTING HEIGHT AND LOCATION, REFER TO SIMILAR DETAIL: B

## ACCESSIBLE EXIT SIGN

SCALE: 3" = 1'-0" — 9

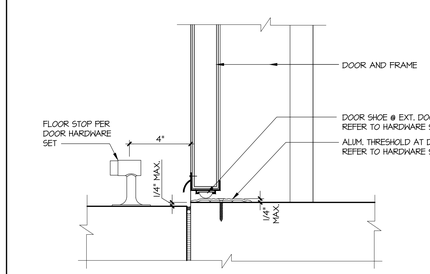


## DOOR SILL AND DOOR STOP

SCALE: 3" = 1'-0" — 6

## DOOR SCHEDULE

NOTE:
PRIOR TO ORDERING DOORS AND FRAMES, CONTRACTOR SHALL FIELD MEASURE EACH ROUGH OPENING AND / OR FRAME OPENING FOR ACCURACY AND PROVIDE DOORS AND FRAMES THAT AGREE WITH THESE OPENINGS.

| DOOR NO. | DOOR SIZE WIDTH x HEIGHT | ROOM NO. | ROOM NAME | DOOR TYPE | DOOR MAT'L | DOOR FINISH | FRAME MAT'L | FRAME FINISH | DETAIL HEAD | DETAIL JAMB | DETAIL THRES | FIRE RATING | HDW SET | DOOR SIGN | REMARKS |
|---|---|---|---|---|---|---|---|---|---|---|---|---|---|---|---|
| 01 | 3'-0" x 7'-0" | - | RECEPTION | A | H.M. | PAINT | H.M. | PAINT | 4A - | 4 - 7 - SIM. | 6 - | - | 02 | 8 - 9 - 10 - | REFER TO DR. NOTE #1 |
| 02 | 3'-0" x 7'-0" | - | RECEPTION | A | H.M. | PAINT | H.M. | PAINT | 4A - | 4 - 7 - SIM. | 6 - | - | 02 | 8 - 9 - 10 - | REFER TO DR. NOTE #1 |
| . | . | . | . | . | . | . | . | . | | | | - | - | | |

## DOOR TYPES

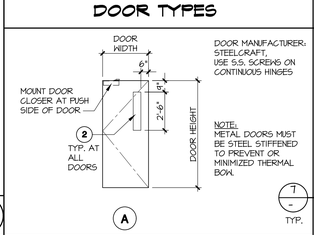


## WINDOW TYPES

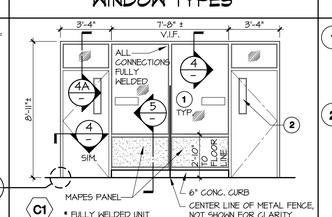


## GLAZING SCHEDULE

1. 1/4" LAMINATED LOW 'E' GLASS @ INTERIOR SIDE W/1/2" AIR SPACE BETWEEN GLAZING, 1/4" LAMINATED TINTED GLASS @ EXTERIOR SIDE.
   TINT COLOR: SOLAR GREY
   WINDOW DESIGN CONNECTIONS TO BE DESIGNED FOR EXPOSURE 'C' & MIN. 110 MPH WIND LOAD.
   MINIMUM STC-34 RATING, REFER TO WINDOW NOTES.
2. 1/4" LAMINATED SOLAR GREY.

## DOOR NOTES

1. EXIT DOORS SHALL BE OPENABLE FROM THE INSIDE WITHOUT THE USE OF A KEY, SPECIAL KNOWLEDGE, OR EFFORT. FLUSH BOLTS OR SURFACE BOLTS ARE PROHIBITED.
2. LATCHING AND LOCKING DOORS THAT ARE HAND ACTIVATED AND WHICH ARE IN A PATH OF TRAVEL SHALL BE OPERABLE WITH A SINGLE EFFORT BY LEVER TYPE HARDWARE, PANIC BARS, PUSH-PULL ACTIVATING BARS, OR OTHER HARDWARE DESIGNED TO PROVIDE PASSAGE WITHOUT REQUIRING THE ABILITY TO GRASP THE OPENING HARDWARE.
3. OPERABLE PARTS OF DOOR OPENING HARDWARE SHALL BE 36 INCHES ABOVE THE FINISH FLOOR / SURFACE.
4. THE FLOOR OR LANDING SHALL BE NOT MORE THAN 1/2 INCH LOWER THAN THE THRESHOLD OF THE DOORWAY. CHANGE IN LEVEL BETWEEN 1/4 INCH AND 1/2 INCH SHALL BE BEVELED WITH A SLOPE NO GREATER THAN 1:2.
5. MAXIMUM EFFORT TO OPERATE DOORS SHALL NOT EXCEED 5 LBS. FOR EXTERIOR DOORS AND 5 LBS. FOR INTERIOR DOORS, WHILE THE AUTHORITY HAVING JURISDICTION, MAY INCREASE THE MAXIMUM EFFORT TO OPERATE FIRE DOORS TO ACHIEVE POSITIVE LATCHING, BUT NOT TO EXCEED 15 LBS. MAXIMUM.
6. ALL EXTERIOR DOORS TO HAVE A TIGHT FIT WITH NO OPENING AT BOTTOM GREATER THAN 1/4". COORDINATE WITH WEATHER STRIP OR SHOE.
7. PROVIDE BRAILLE SIGNAGE ON THE WALL ADJACENT TO THE LATCH, TYPICAL ALL DOORS. ATTACH WITH ADHESIVE TO GLAZING.
8. "METAL" DOOR INDICATES HOLLOW METAL DOOR.
9. "METAL" FRAME INDICATES HOLLOW METAL FRAME.
10. ALL DOORS SHALL BE 1 3/4" THICK, UNLESS NOTED OTHERWISE.
11. ALL DOORS AND FRAMES SHALL BE PAINTED ALL AROUND, TOP, BOTTOM AND ON BOTH SIDES INCLUDING BACKBEND. DO NOT PAINT LABELS.
12. FIT DOORS WITH WEATHER STRIPPING, U.N.O., REFER TO HARDWARE SETS.
13. PROVIDE HEAD, JAMB, DOOR BOTTOM DROP SEALS AND THRESHOLD WITH SILICONE SEALS (S) AND PEMKO-PRENE' (PK). U.N.O
14. HOLLOW METAL DOOR FRAMES SHALL HAVE CONTINUOUSLY WELDED CORNERS ALONG THE RETURN, FACE, RABBET AND STOP INSIDE OF THE MITER AND GROUND SMOOTH.
15. DOOR HANDLE SHALL HAVE A MIN. 1" CLEARANCE BETWEEN FINISHED WALL SURFACE.
16. ALL DOOR CLOSERS SHALL BE ADJUSTED SO THAT FROM AN OPEN POSITION THE TIME REQUIRED TO MOVE THE DOOR FROM THE LATCH IS 5 SECONDS MINIMUM.
17. WHERE FLUSH BOLTS OCCUR IN THE PATH OF TRAVEL (POT), USE AUTOMATIC ACCESSIBLE FLUSH BOLTS.
18. FLOOR STOPS SHALL BE MAXIMUM 4" FROM WALLS.
19. PROVIDE ALL DOORS WITH DOOR STOPS. DOOR THAT OPEN 180° SHALL HAVE A STAINLESS STEEL, RUBBER BUMPER, FLOOR MOUNTED DOOR STOP. DOORS THAT OPEN 90° SHALL HAVE WALL MOUNTED, STAINLESS STEEL RUBBER BUMPER DOOR STOPS. U.N.O.
20. ALL EXTERIOR DOORS SHALL HAVE SHEET METAL RAIN DRIPS. DRIPS SHALL BE HEMMED WITH A PAINTED FINISH TO MATCH DOOR FRAME, U.N.O.
21. "NOT USED".
22. ALL METAL DOOR AND WINDOW FRAMES SHALL HAVE DIMPLED HOLES FOR FASTENERS. SPOT WELD SCREWS TO FRAME, FILL WITH BONDO, SAND SMOOTH AND PREPARE FOR PAINTING.
24. PANIC HARDWARE ACTIVATED MANUALLY.
25. DOOR FRAMES: EXTERIOR OPENINGS SHALL BE 14 GA.
26. ALL EXIT DOOR HARDWARE TO OPERATE WITH ONE MOTION TO PROVIDE ACCESS TO THE EXTERIOR. PROJECT INSPECTOR TO INSPECT DOOR HARDWARE.
27. "NOT USED".
28. SEALANT COLOR SHALL MATCH DOOR FRAME COLOR, UNLESS NOTED OTHERWISE.

## WINDOW NOTES

1. PROVIDE SHOP DRAWINGS INDICATING WINDOW TYPE, SIZE, GLAZING STC RATING, METHOD OF CONSTRUCTION, PANNING, RECEPTORS AND ANCHORAGE FOR REVIEW BY ARCHITECT.
2. SEALANT COLOR SHALL MATCH WINDOW FRAME COLOR, U.N.O.
3. WINDOW MANUFACTURER SHALL TEST WINDOW ASSEMBLIES PER ASTM E90 - 99, OR LATEST.

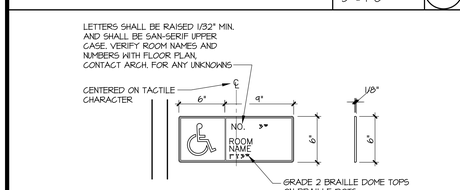


TYPICAL SIGN NOTES:

1. BRAILLE SYMBOLS: G.A. CONTRACTED GRADE 2 BRAILLE SHALL BE USED FOR ALL DOORS. DOTS SHALL BE 1/10 INCH (2.54mm) ON CENTERS IN EACH CELL WITH 2/10 INCH (5.08mm) SPACE BETWEEN CELLS. DOTS SHALL BE RAISED A MIN. OF 1/40 INCH (0.635mm) ABOVE THE BACKGROUND
2. SIGNS TO BE 1/4" THICK THERMO PLASTIC ACRYLIC, WITH 1/32" VANDAL PROOF AND FULLY INTEGRATED MONOLITHIC RAISED BORDERS, GRAPHICS, LETTERS, AND BRAILLE DOTS. PROVIDE VANDAL RESISTANT ADHESIVE SEE DETAIL 4/-. SIGNS SHALL BE UV AND TEMPERATURE RESISTANT FOR INDOOR AND OUTDOOR APPLICATION. ACCEPTABLE SIGN MANUFACTURERS: 'ASI SIGNAGE INNOVATIONS', 'GEMINI SIGNS', 'VOMAR', 'MOHAWK SIGNS' OR EQUAL.
3. FIGURES, LETTERS, AND BORDERS ARE TO BE WHITE ON A BACKGROUND THAT MATCHES SCHOOL SIGNAGE.
4. REFER TO: B FOR MOUNTING HEIGHT AND LOCATION
5. ROOM / BUILDING SIGNS SHALL HAVE PRIOR APPROVAL BY SCHOOL DISTRICT. BUILDING IDENTIFICATION NUMBER AND COLOR TO MATCH EXISTING BUILDINGS AT NO EXTRA COST

## ROOM SIGNAGE

SCALE: 1 1/2" = 1'-0" — 10

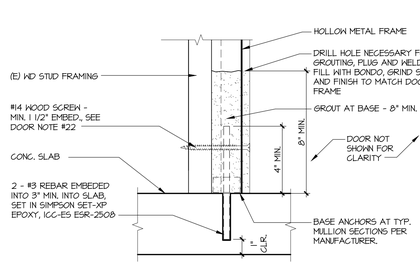


## TYPICAL DOOR JAMB AT BASE

SCALE: 3"= 1' - 0" — 7

NOTE:
3,000 PSI CONC. (NO PEA GRAVEL MIX ALLOWED)

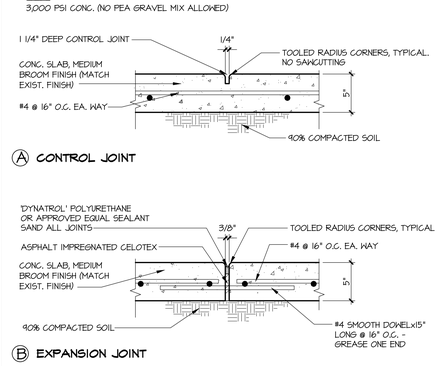


## CONC. PAVING TYP. JOINTS

SCALE: 1 1/2" = 1'-0" — 3

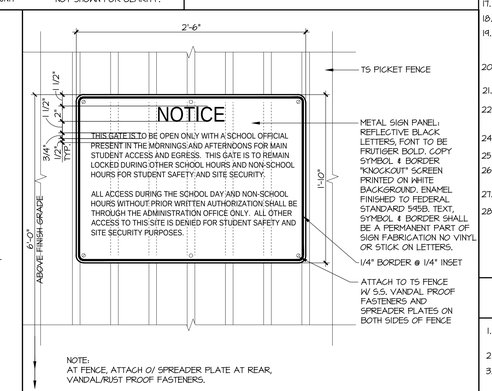


NOTE:
AT FENCE, ATTACH O/ SPREADER PLATE AT REAR, VANDAL/RUST PROOF FASTENERS.

## SIGNAGE @ NON-ACCESSIBLE GATE

SCALE: 1 1/2"= 1' - 0" — 2

| NO. | DATE | REVISION | BY |
|---|---|---|---|
| | | | |

DESIGNED BY: AER
DRAWN BY: CM
CHECKED BY: JFP


ZIEMBA + PRIETO ARCHITECTS
601 South Glenoaks Blvd. • Suite 400 • Burbank, CA 91502
P: (818) 841-2365 • F: (818) 841-7782 • www.ziembaprietoarch.com


PARTIAL FLOOR PLANS - BLDG. 'C' & MISC. DETAILS

SHELTN ELEMENTARY SCHOOL
12500 E. NACORA ST.
ROWLAND HEIGHTS, CA 91748

ROWLAND UNIFIED S.D.
1830 NOGALES STREET
ROWLAND HEIGHTS, CA 91748

LICENSED ARCHITECT — JORGE F. PRIETO — C-33216 — RENEWAL DATE NOV. 30, 2017 — STATE OF CALIFORNIA

DATE: 04/03/17

JOB NO.: 160509

SHEET NO. AS1.3


© BY ZIEMBA + PRIETO ARCHITECTS ALL COMMON LAW COPYRIGHT AND OTHER PROPERTY RIGHTS RESERVED. THIS DOCUMENT IS AN ORIGINAL AND UNPUBLISHED WORK PRODUCT OF ZIEMBA + PRIETO ARCHITECTS THIS WORK SHALL NOT BE DUPLICATED, COPIED, DISCLOSED, USED, IN CONNECTION WITH ANY WORK OR PROJECT OTHER THAN THE SPECIFIC PROJECT FOR WHICH THEY HAVE BEEN PREPARED OR ASSIGNED TO ANY THIRD PARTY WITHOUT FIRST OBTAINING THE EXPRESS WRITTEN CONSENT OF ZIEMBA + PRIETO ARCHITECTS. VISUAL CONTACT WITH THIS DOCUMENT SHALL CONSTITUTE CONCLUSIVE EVIDENCE OF ACCEPTANCE OF THESE RESTRICTIONS. CONTRACTORS SHALL VERIFY AND BE RESPONSIBLE FOR ALL DIMENSIONS AND CONDITIONS ON THE JOB. UPON DISCOVERY OF ANY VARIATION, DISCREPANCY, OR OMISSION, NOTIFY ZIEMBA + PRIETO ARCHITECTS.


BID SET
APRIL 04, 2017

2018-06-18 - 11:52AM